EMC Test Report

Client Name	:	Wuhan Lotuxs Technology Co., Ltd.
Address	:	5F, E2 Building, Future City, NO. 999 High-tech Avenue, East Lake High-tech Development Zone, Wuhan, 430206, China
Product Name	:	Laser Therapy Device
Date	:	May 24, 2022

Shenzhen Anbotek Compliance Laboratory Limited

Contents

1. General Information 5
1.1. Client Information 5
1.2. Description of Device (EUT) 5
1.3. Auxiliary Equipment Used During Test 5
1.4. Description of Test Mode 6
1.5. Test Summary 6
1.6. Test Equipment List 7
1.7. Description of Test Facility 9
1.8. EMS Performance Criteria 9
2. Power Line Conducted Emission Test 10
2.1. Test Standard and Limit 10
2.2. Test Setup 10
2.3. EUT Configuration on Measurement 10
2.4. Operating Condition of EUT 10
2.5. Test Procedure 11
2.6. Test Results 11
3. Radiated Emission Test 14
3.1. Test Standard and Limit 14
3.2. Test Setup 14
3.3. EUT Configuration on Measurement 14
3.4. Operating Condition of EUT 15
3.5. Test Procedure 15
3.6. Test Results 15
4. Harmonic Current Emission Test 22
4.1. Test Standard 22
4.2. Test Setup 22
4.3. Operating Condition of EUT 22
4.4. Test Results 22
5. Voltage Fluctuations & Flicker Test 23
5.1. Test Standard 23
5.2. Test Setup 23
5.3. Operating Condition of EUT 23
5.4. Test Results 23
6. Electrostatic Discharge Immunity Test 24
6.1. Test Standard and Level 24
6.2. Test Setup 24
6.3. EUT Configuration on Measurement 24
6.4. Operating Condition of EUT 24
6.5. Test Procedure 25

6.6. Test Results 25
7. RF Field Strength Susceptibility Test 27
7.1. Test Standard and Level 27
7.2. Test Setup 27
7.3. EUT Configuration on Measurement 28
7.4. Operating Condition of EUT 28
7.5. Test Procedure 28
7.6. Measuring Results 28
8. Electrical Fast Transient/Burst Immunity Test 30
8.1. Test Standard and Level 30
8.2. Test Setup 30
8.3. EUT Configuration on Measurement 30
8.4. Operating Condition of EUT 30
8.5. Test Procedure 31
8.6. Test Results 31
9. Surge Immunity Test 33
9.1. Test Standard and Level 33
9.2. Test Setup 33
9.3. EUT Configuration on Measurement 33
9.4. Operating Condition of EUT 33
9.5. Test Procedure 34
9.6. Test Results 34
10. Injected Currents Susceptibility Test 36
10.1. Test Standard and Level 36
10.2. Test Setup 36
10.3. EUT Configuration 36
10.4. Operating Condition of EUT 36
10.5. Test Procedure 37
10.6. Test Results 37
11. Voltage Dips And Interruptions Test 39
11.1. Test Standard and Level 39
11.2. Test Setup 39
11.3. EUT Configuration on Measurement 39
11.4. Operating Condition of EUT 40
11.5. Test Procedure 40
11.6. Test Results 40
APPENDIX I -- TEST SETUP PHOTOGRAPH 42
APPENDIX II -- EXTERNAL PHOTOGRAPH 46
APPENDIX III -- INTERNAL PHOTOGRAPH 48

TEST REPORT

Applicant	:	Wuhan Lotuxs Technology Co., Ltd.
Manufacturer	:	Wuhan Lotuxs Technology Co., Ltd.
Product Name	:	Laser Therapy Device
Model No.	:	PowerCure Pro, PowerCure
Trade Mark	:	N.A.
Rating(s)	:	Input: DC 5V/2A Output: 1300mW Battery：DC 3.7V, 5000mAh Internal operating frequency：1Hz
Test Standard(s)	:	**EN 55014-1: 2017+A11: 2020; EN IEC 61000-3-2: 2019; EN 61000-3-3: 2013+A1:2019; EN 55014-2: 2015 (IEC 61000-4-2; IEC 61000-4-4; IEC 61000-4-5; IEC 61000-4-6; IEC 61000-4-11)**

The device described above is tested by Shenzhen Anbotek Compliance Laboratory Limited To determine the maximum emission levels emanating from the device and the severe levels of the device can endure and its performance criterion. This report shows the EUT to be technically compliant with the EN 55014-1, EN IEC 61000-3-2, EN 61000-3-3 and EN 55014-2 requirements. The test results are contained in this report and Shenzhen Anbotek Compliance Laboratory Limited Is assumed full responsibility for the accuracy and completeness of these tests.

This report applies to above tested sample only and shall not be reproduced in part without written approval of Shenzhen Anbotek Compliance Laboratory Limited

Date of Receipt: Apr. 28, 2022

Date of Test: May 05 ~ May 09, 2022

Prepared By: Yee Huang

(Yee Huang)

Approved & Authorized Signer: KingKong Jin

(KingKong Jin)

Address: 1/F., Building D, Sogood Science and Technology Park, Sanwei Community, Hangcheng Street, Bao'an District, Shenzhen, Guangdong, China.
Tel:(86) 755-26066440 Fax: (86) 755-26014772 Email: service@anbotek.com
Hotline 400-003-0500
www.anbotek.com

1. General Information

1.1. Client Information

Applicant	:	Wuhan Lotuxs Technology Co., Ltd.
Address	:	5F, E2 Building, Future City, NO. 999 High-tech Avenue, East Lake High-tech Development Zone, Wuhan, 430206, China
Manufacturer	:	Wuhan Lotuxs Technology Co., Ltd.
Address	:	5F, E2 Building, Future City, NO. 999 High-tech Avenue, East Lake High-tech Development Zone, Wuhan, 430206, China
Factory	:	Wuhan Lotuxs Technology Co., Ltd.
Address	:	5F, E2 Building, Future City, NO. 999 High-tech Avenue, East Lake High-tech Development Zone, Wuhan, 430206, China

1.2. Description of Device (EUT)

Product Name	:	Laser Therapy Device	
Model No.	:	PowerCure Pro, PowerCure (Note: All samples are the same except the model number & appearance, so we prepare “PowerCure Pro” for test only.)	
Trade Mark	:	N.A.	
Test Power Supply	:	DC 5V Via adapter / DC 3.7V	
Test Sample No.	:	1-1-1	
Product Description	:	Adapter:	M/N: CT-11 S/N: 16022012676 CE,CCC
Remark: (1) For a more detailed features description, please refer to the manufacturer’s specifications or the User’s Manual.			

1.3. Auxiliary Equipment Used During Test

N/A		

1.4. Description of Test Mode

Pretest Mode	Description
Mode 1	Charging
Mode 2	Normal work(CW)
Mode 3	Normal work(Pulse)

For Mode 1 Block Diagram of Test Setup

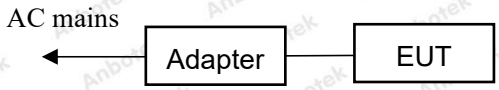

For Mode 2~3 Block Diagram of Test Setup

1.5. Test Summary

Test Items	Test Mode	Status
Power Line Conducted Emission Test (150kHz To 30MHz)	Mode 1	P
Radiated Emission Test (30MHz To 1000MHz)	All Mode	P
Harmonic Current Test	/	N
Voltage Fluctuations and Flicker Test	Mode 1	P
Electrostatic Discharge immunity Test	All Mode	P
RF Field Strength susceptibility Test	All Mode	P
Electrical Fast Transient/Burst Immunity Test	Mode 1	P
Surge Immunity Test	Mode 1	P
Injected Currents Susceptibility Test	Mode 1	P
Voltage Dips and Interruptions Test	Mode 1	P
P) Indicates “PASS”. N) Indicates “Not applicable”.		

1.6. Test Equipment List

Conducted Emission Measurement

Item	Equipment	Manufacturer	Model No.	Serial No.	Last Cal.	Cal. Interval
1.	EMI Test Receiver	Rohde & Schwarz	ESCI	100990	Sept. 7, 2021	1 Year
2.	L.I.S.N. Artificial Mains Network	Schwarzbeck	NSLK 8127	8127386	Sept. 7, 2021	1 Year
3.	L.I.S.N. Artificial Mains Network	Schwarzbeck	NSLK 8126	8126377	Sept. 7, 2021	1 Year
4.	Software Name	Ferrari Technology	EZ-EMC	EMC-CON 3A1.1	N/A	N/A

Radiated Emission Measurement

Item	Equipment	Manufacturer	Model No.	Serial No.	Last Cal.	Cal. Interval
1.	EMI Test Receiver	Rohde & Schwarz	ESPI	101604	Sept. 7, 2021	1 Year
2.	Pre-amplifier	EMtrace	RP01A	50017	Sept. 7, 2021	1 Year
3.	TRILOG Broadband Antenna	Schwarzbeck	VULB 9163	01417	Sept. 7, 2021	2 Year
4.	Software Name	Ferrari Technology	EZ-EMC	Anbo-3A1	N/A	N/A

Harmonic and Flicker Measurement

Item	Equipment	Manufacturer	Model No.	Serial No.	Last Cal.	Cal. Interval
1.	Programmable AC Power source	IVYTECH	APS-5005A	632734	Oct. 22, 2021	1 Year
2.	Harmonic and Flicker Analyzer	EMC-PARTNER	HMONICS 1000-1P	164	Oct. 22, 2021	1 Year
3.	Harmonics-1000	N/A	Ed.3.0+4.0	N.A	N/A	N/A

Electrostatic Discharge Measurement

Item	Equipment	Manufacturer	Model No.	Serial No.	Last Cal.	Cal. Interval
1.	ESD Simulators	3Ctest	EDS-30T	ES0131505	Sept.15, 2021	1 Year

Electrical Fast Transient/Burst Immunity Measurement

Item	Equipment	Manufacturer	Model No.	Serial No.	Last Cal.	Cal. Interval
1.	EFT Burst Simulator	PRIMA	EFT61004B	PR10114282	Sept. 7, 2021	1 Year

Address: 1/F., Building D, Sogood Science and Technology Park, Sanwei Community, Hangcheng Street, Bao'an District, Shenzhen, Guangdong, China.
Tel:(86) 755-26066440 Fax: (86) 755-26014772 Email: service@anbotek.com
Hotline 400-003-0500
www.anbotek.com

R/S Immunity Measurement

Item	Equipment	Manufacturer	Model No.	Serial No.	Last Cal.	Cal. Interval
1.	Signal Generator	Agilent	N5182A	MY48180656	Oct. 22, 2021	1 Year
2.	Amplifier	Micotoop	MPA-80-1000-250	MPA1903096	Oct. 22, 2021	1 Year
3.	Amplifier	Micotoop	MPA-1000-6000-100	MPA1903122	Oct. 22, 2021	1 Year
4.	Log-Periodic Antenna	Schwarzbeck	VULP9118E	00992	N/A	N/A
5.	Horn Antenna	Instruments corporation	GTH-0118	351600	Oct. 22, 2021	2 Year
6.	Power Sensor	Agilent	E9301A	MY41498906	Oct. 22, 2021	1 Year
7.	Power Sensor	Agilent	E9301A	MY41498088	Oct. 22, 2021	1 Year
8.	Power Meter	Agilent	E4419B	GB40202909	Oct. 22, 2021	1 Year
9.	Electric field Probe	Narda	EP 601	811ZX10351	Oct. 22, 2021	1 Year
10.	RS Test software	EMtrace	EM 3	V1.1.7	N/A	N/A

Surge Measurement

Item	Equipment	Manufacturer	Model No.	Serial No.	Last Cal.	Cal. Interval
1.	Surge Generator	EMPEK	LSG-5060G	/	Sept. 7, 2021	1 Year
2.	CDN	EMPEK	CDN-5110G	06110005N	Sept. 7, 2021	1 Year

Injected Currents Susceptibility Measurement

Item	Equipment	Manufacturer	Model No.	Serial No.	Last Cal.	Cal. Interval
1.	C/S Conducted Immunity Test System	FRANKONIA	CIT-10	126A1196/2012	Oct. 22, 2021	1 Year
2.	CDN	FRANKONIA	CDN - M2+ M3	A2210178/2012	Oct. 22, 2021	1 Year
3.	6dB Attenuator	FRANKONIA	DAM 26W	1172202	Oct. 22, 2021	1 Year
4.	CIT-10	FRANKONIA	Version1.1.7	N/A	N/A	N/A
5.	EM-Clamp	FRANKONIA	EMCL-20	18101728-0103	May 17,2021	1 Year

Voltage Dips and Interruptions Measurement

Item	Equipment	Manufacturer	Model No.	Serial No.	Last Cal.	Cal. Interval
1.	Voltage DIPS and Up Generator	3ctest	VDG-1105G	EC0171306	Sept. 7, 2021	1 Year

Address: 1/F., Building D, Sogood Science and Technology Park, Sanwei Community, Hangcheng Street, Bao'an District, Shenzhen, Guangdong, China.
Tel:(86) 755-26066440 Fax: (86) 755-26014772 Email: service@anbotek.com
Hotline 400-003-0500
www.anbotek.com

1.7. Description of Test Facility

The test facility is recognized, certified, or accredited by the following organizations:

FCC-Registration No.: 184111

Shenzhen Anbotek Compliance Laboratory Limited, EMC Laboratory has been registered and fully described in a report filed with the (FCC) Federal Communications Commission. The acceptance letter from the FCC is maintained in our files. Registration No. 184111.

ISED-Registration No.: 8058A

Shenzhen Anbotek Compliance Laboratory Limited, EMC Laboratory has been registered and fully described in a report filed with the (ISED) Innovation, Science and Economic Development Canada. The acceptance letter from the ISED is maintained in our files. Registration 8058A.

Test Location

Shenzhen Anbotek Compliance Laboratory Limited.
1/F, Building D, Sogood Science and Technology Park, Sanwei community, Hangcheng Street, Bao'an District, Shenzhen, Guangdong, China.518128

1.8. EMS Performance Criteria

√ A: Normal performance within the specification limits
√ B: Temporary degradation or loss of function or performance which is self-recoverable
√ C: Temporary degradation or loss of function or performance which requires operator intervention or system reset
√ D: Degradation or loss of function which is not recoverable due to damage of equipment (components) or software, or loss of data

Note: The manufacturer's specification may define effects on the EUT which may be considered insignificant, and therefore acceptable.

This classification may be used as a guide in formulating performance criteria, by committees responsible for generic, product and product-family standards, or as a framework for the agreement on performance criteria between the manufacturer and the purchaser, for example where no suitable generic, product or product-family standard exists.

2. Power Line Conducted Emission Test

2.1. Test Standard and Limit

Test Standard	EN 55014-1

Limits for conducted emissions

	Frequency (MHz)	At mains terminals (dBμV)	
		Quasi-peak Level	Average Level
Test Limit	0.15 ~ 0.50	66.0 ~ 56.0*	59.0 ~ 46.0*
	0.50 ~ 5.00	56.0	46.0
	5.00 ~ 30.00	60.0	50.0
Remark: (1) The lower limit shall apply at the transition frequencies. (2) The limit decreases linearly with the logarithm of the frequency in the range 0.15MHz to			

2.2. Test Setup

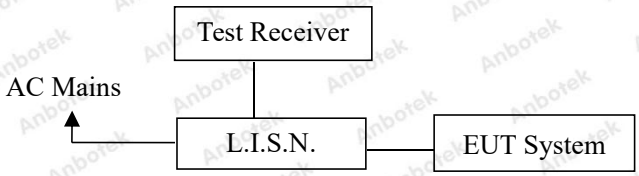

2.3. EUT Configuration on Measurement

The following equipments are installed on Conducted Emission Measurement to meet EN 55014–1 requirements and operating in a manner which tends to maximize its emission characteristics in a normal application.

2.4. Operating Condition of EUT

2.4.1. Setup the EUT as shown in Section 2.2.

2.4.2. Turn on the power of all equipments.

2.4.3. Let the EUT work in test mode and measure it.

2.5. Test Procedure

The EUT is put on the plane 0.8 m high above the ground by insulating support and connected to the AC mains through Line Impedance Stability Network (L.I.S.N). This provided a 50ohm coupling impedance for the tested equipments. Both sides of AC line are investigated to find out the maximum conducted emission according to the EN 55014-1 regulations during conducted emission measurement.

The bandwidth of the field strength meter (R&S Test Receiver) is set at 9 kHz in 150 kHz~30MHz.

The frequency range from 150 kHz to 30MHz is investigated for AC mains.

All the test results are listed in Section 2.6.

2.6. Test Results

PASS

The test curves are shown in the following pages.

Address: 1/F., Building D, Sogood Science and Technology Park, Sanwei Community, Hangcheng Street, Bao'an District, Shenzhen, Guangdong, China.
Tel:(86) 755-26066440 Fax: (86) 755-26014772 Email: service@anbotek.com
Hotline 400-003-0500
www.anbotek.com

Conducted Emission Test Data

Test Site: 1# Shielded Room

Test Specification: DC 5V Via adapter

Comment: Live Line

Temp.: 23.2℃ Hum.: 50%

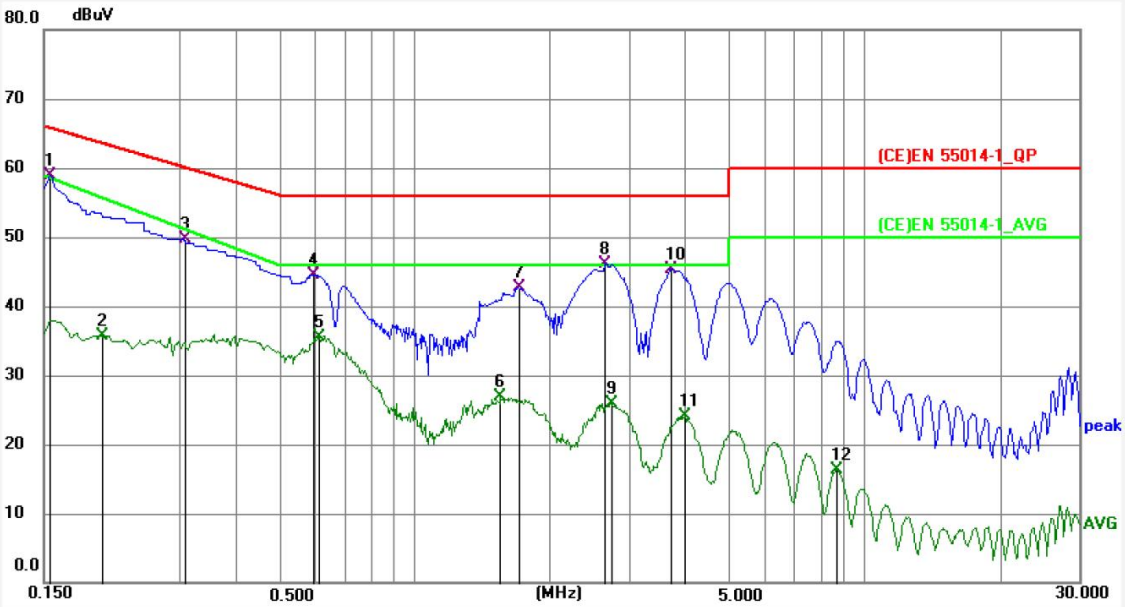

No.	Freq. (MHz)	Reading (dBuV)	Factor (dB)	Result (dBuV)	Limit (dBuV)	Over Limit (dB)	Detector	Remark
1	0.1544	58.01	0.92	58.93	65.76	-6.83	QP	
2	0.2007	34.77	0.86	35.63	55.86	-20.23	AVG	
3	0.3067	48.76	0.92	49.68	60.06	-10.38	QP	
4	0.5955	43.70	0.89	44.59	56.00	-11.41	QP	
5	0.6134	34.57	0.90	35.47	46.00	-10.53	AVG	
6	1.5540	25.91	0.93	26.84	46.00	-19.16	AVG	
7	1.7024	41.70	0.93	42.63	56.00	-13.37	QP	
8	2.6520	45.24	0.93	46.17	56.00	-9.83	QP	
9	2.7374	25.07	0.93	26.00	46.00	-20.00	AVG	
10	3.7229	44.34	0.96	45.30	56.00	-10.70	QP	
11	4.0019	23.10	0.96	24.06	46.00	-21.94	AVG	
12	8.6504	15.32	1.02	16.34	50.00	-33.66	AVG	

Note: Result=Reading+Factor Over Limit=Result-Limit

Conducted Emission Test Data

Test Site: 1# Shielded Room

Test Specification: DC 5V Via adapter

Comment: Neutral Line

Temp.: 23.2℃ Hum.: 50%

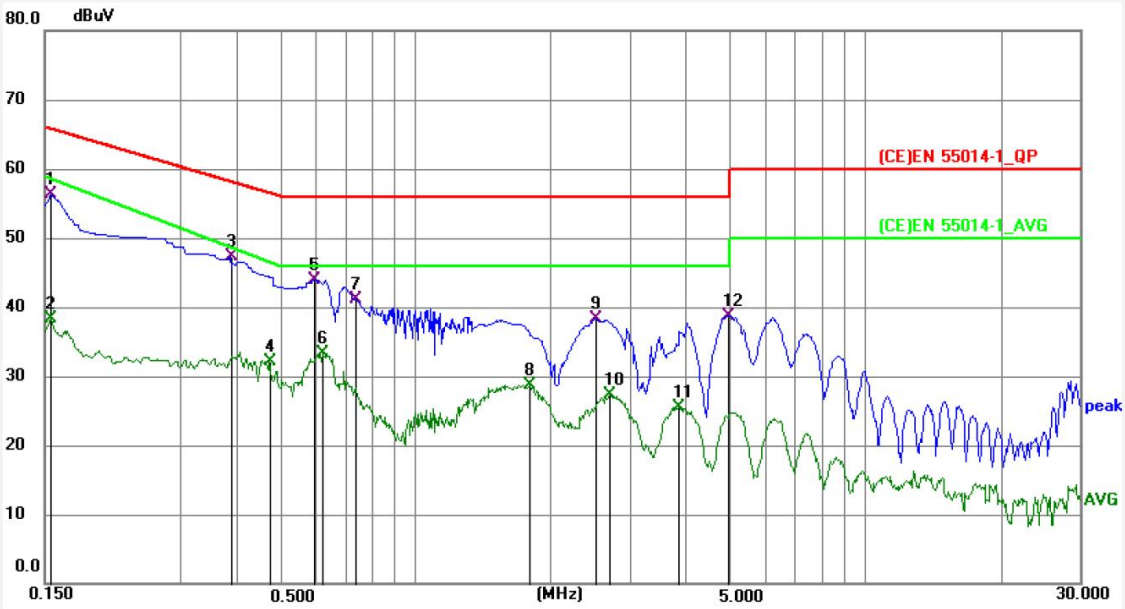

No.	Freq. (MHz)	Reading (dBuV)	Factor (dB)	Result (dBuV)	Limit (dBuV)	Over Limit (dB)	Detector	Remark
1	0.1544	55.46	0.92	56.38	65.76	-9.38	QP	
2	0.1544	37.29	0.92	38.21	58.69	-20.48	AVG	
3	0.3871	46.42	0.88	47.30	58.13	-10.83	QP	
4	0.4738	31.23	0.86	32.09	46.58	-14.49	AVG	
5	0.5955	43.06	0.89	43.95	56.00	-12.05	QP	
6	0.6225	32.47	0.90	33.37	46.00	-12.63	AVG	
7	0.7395	40.25	0.91	41.16	56.00	-14.84	QP	
8	1.8060	27.86	0.94	28.80	46.00	-17.20	AVG	
9	2.5304	37.29	0.93	38.22	56.00	-17.78	QP	
10	2.7149	26.29	0.93	27.22	46.00	-18.78	AVG	
11	3.8400	24.52	0.96	25.48	46.00	-20.52	AVG	
12	4.9874	37.77	0.98	38.75	56.00	-17.25	QP	

Note: Result=Reading+Factor Over Limit=Result-Limit

3. Radiated Emission Test

3.1. Test Standard and Limit

Test Standard	EN 55014-1

Radiated Emission Test Limit

Test Limit	Frequency (MHz)	DISTANCE (Meters)	FIELD STRENGTHS LIMIT (dBμV/m)
	30 ~ 230	3	40
	230 ~ 1000	3	47

Remark: (1) The smaller limit shall apply at the combination point between two frequency bands.
(2) Distance refers to the distance in meters between the measuring instrument antenna and the closed point of any part of the EUT.

3.2. Test Setup

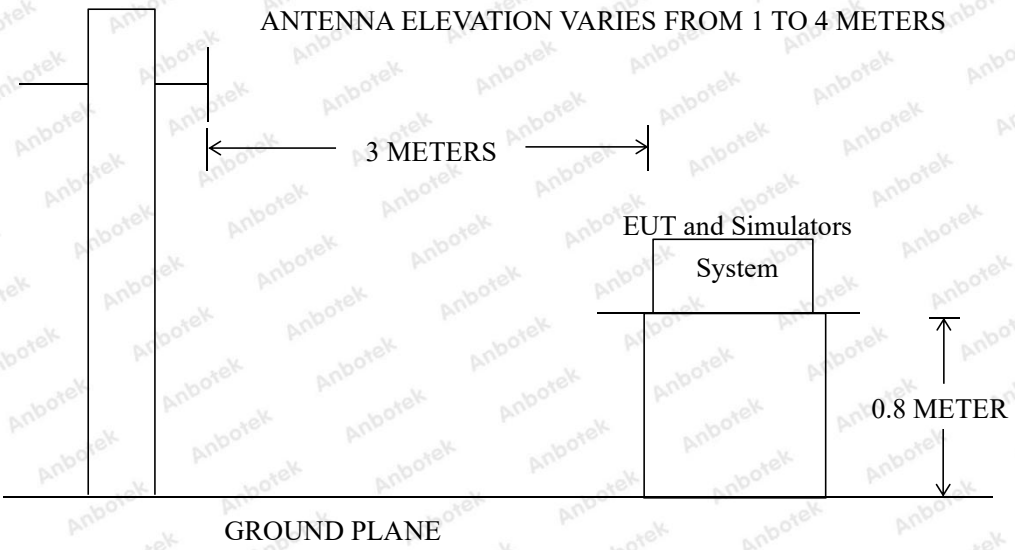

3.3. EUT Configuration on Measurement

The EN 55014-1 regulations test method must be used to find the maximum emission during radiated emission measurement.

3.4. Operating Condition of EUT

3.4.1. Setup the EUT as shown in Section 3.2.

3.4.2. Turn on the power of all equipments.

3.4.3. Let the EUT work in test mode and measure it.

3.5. Test Procedure

The EUT is placed on a turn table which is 0.8 meter high above the ground. The turn table can rotate 360 degrees to determine the position of the maximum emission level. The EUT is set 3 meters away from the receiving antenna which is mounted on a antenna tower. The antenna can be moved up and down from 1 to 4 meters to find out the maximum emission level. Bilog antenna is used as a receiving antenna. Both horizontal and vertical polarization of the antenna are set on test.

The bandwidth of the Receiver is set at 120 kHz.

The EUT is tested in 9*6*6 Chamber.

The test results are listed in Section 3.6.

3.6. Test Results

PASS

The frequency range from 30MHz to 1000MHz is investigated.

The test curves are shown in the following pages.

Address: 1/F., Building D, Sogood Science and Technology Park, Sanwei Community, Hangcheng Street, Bao'an District, Shenzhen, Guangdong, China.
Tel:(86) 755-26066440 Fax: (86) 755-26014772 Email: service@anbotek.com
Hotline 400-003-0500
www.anbotek.com

Test item:	**Radiation Test**	**Polarization:**	**Horizontal**
Standard:	**(RE)EN 55014-1**	**Power Source:**	**DC 5V Via adapter**
Distance:	**3m**	**Temp.(℃)/Hum.(%RH):**	**23.5(℃)/56%RH**
Test Mode:	**Charging**		

No.	Freq. (MHz)	Reading (dBuV)	Factor (dB/m)	Result (dBuV/m)	Limit (dBuV/m)	Over Limit (dB)	Detector	Height (cm)	degree (deg)	Remark
1	64.8864	44.53	-17.83	26.70	40.00	-13.30	peak			
2	170.1947	54.72	-19.51	35.21	40.00	-4.79	peak			
3	192.4185	43.10	-17.44	25.66	40.00	-14.34	peak			
4	261.5163	49.36	-14.49	34.87	47.00	-12.13	peak			
5	306.2164	45.79	-13.10	32.69	47.00	-14.31	peak			
6	948.7609	30.61	1.21	31.82	47.00	-15.18	peak			

Note: **Result=Reading+Factor** **Over Limit=Result-Limit**

Test item:	**Radiation Test**	**Polarization:**	**Vertical**
Standard:	**(RE)EN 55014-1**	**Power Source:**	**DC 5V Via adapter**
Distance:	**3m**	**Temp.(℃)/Hum.(%RH):**	**23.5(℃)/56%RH**
Test Mode:	**Charging**		

No.	Freq. (MHz)	Reading (dBuV)	Factor (dB/m)	Result (dBuV/m)	Limit (dBuV/m)	Over Limit (dB)	Detector	Height (cm)	degree (deg)	Remark
1	30.2640	50.31	-18.74	31.57	40.00	-8.43	peak			
2	33.9174	50.43	-18.65	31.78	40.00	-8.22	peak			
3	46.0970	43.69	-15.70	27.99	40.00	-12.01	peak			
4	70.8315	53.08	-20.19	32.89	40.00	-7.11	peak			
5	153.2004	53.15	-20.47	32.68	40.00	-7.32	peak			
6	164.3301	55.63	-19.78	35.85	40.00	-4.15	peak			

Note: **Result=Reading+Factor** **Over Limit=Result-Limit**

Test item:	**Radiation Test**	**Polarization:**	**Horizontal**
Standard:	**(RE)EN 55014-1**	**Power Source:**	**DC 3.7V**
Distance:	**3m**	**Temp.(℃)/Hum.(%RH):**	**23.5(℃)/56%RH**
Test Mode:	**Normal work(CW)**		

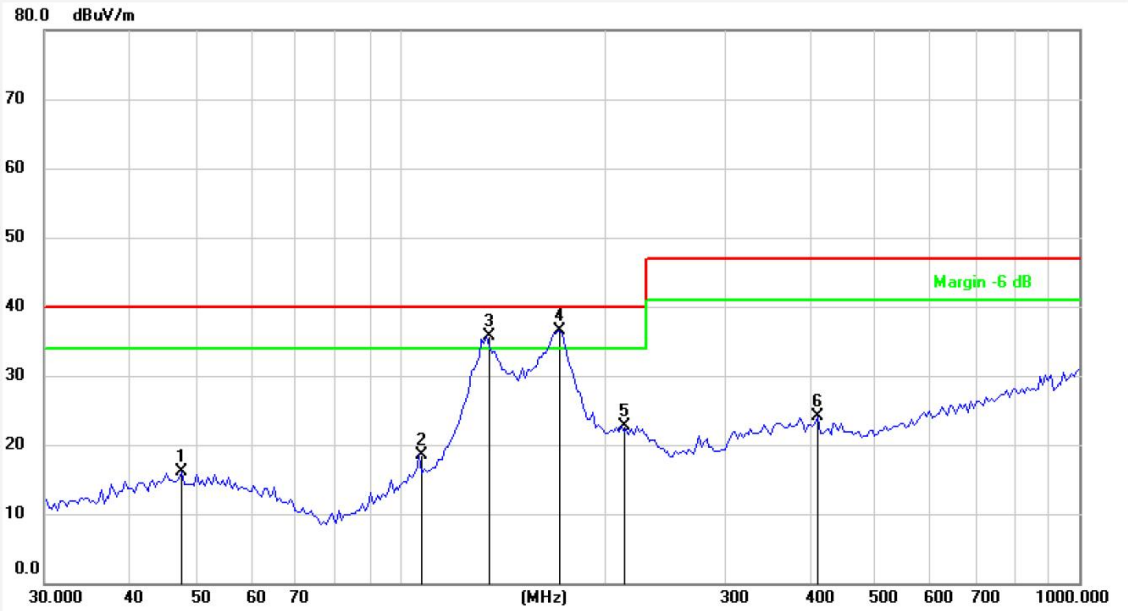

No.	Freq. (MHz)	Reading (dBuV)	Factor (dB/m)	Result (dBuV/m)	Limit (dBuV/m)	Over Limit (dB)	Detector	Height (cm)	degree (deg)	Remark
1	47.7422	31.76	-15.68	16.08	40.00	-23.92	peak			
2	106.9461	35.73	-17.17	18.56	40.00	-21.44	peak			
3	134.3235	56.49	-20.71	35.78	40.00	-4.22	peak			
4	171.6933	55.96	-19.44	36.52	40.00	-3.48	peak			
5	211.8977	39.67	-16.89	22.78	40.00	-17.22	peak			
6	412.5467	34.05	-9.88	24.17	47.00	-22.83	peak			

Note: **Result=Reading+Factor** **Over Limit=Result-Limit**

Test item:	**Radiation Test**	**Polarization:**	**Vertical**
Standard:	**(RE)EN 55014-1**	**Power Source:**	**DC 3.7V**
Distance:	**3m**	**Temp.(℃)/Hum.(%RH):**	**23.5(℃)/56%RH**
Test Mode:	**Normal work(CW)**		

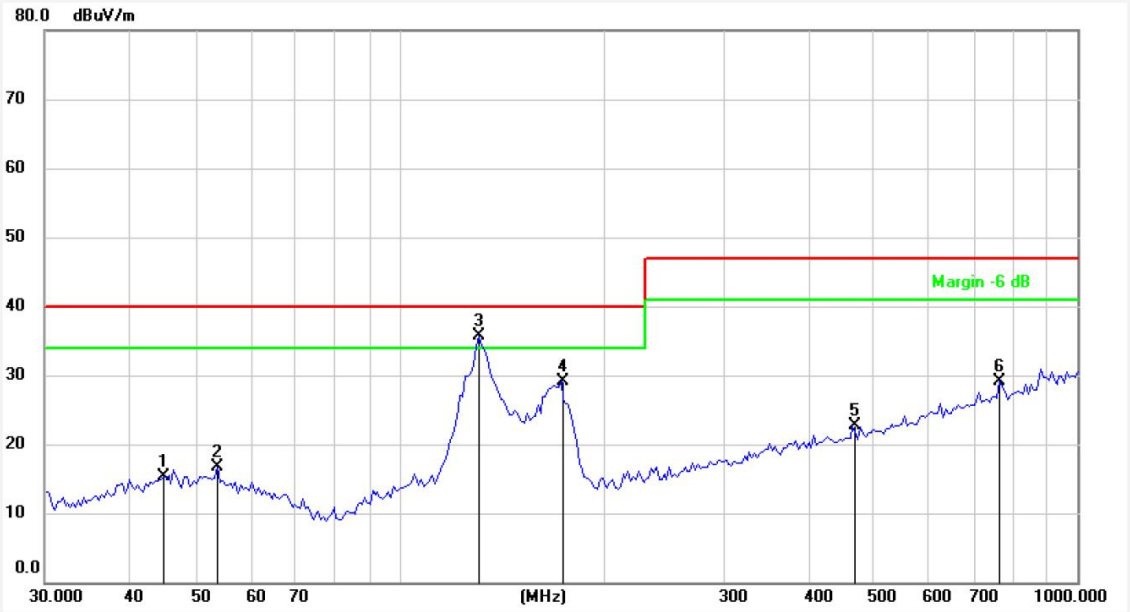

No.	Freq. (MHz)	Reading (dBuV)	Factor (dB/m)	Result (dBuV/m)	Limit (dBuV/m)	Over Limit (dB)	Detector	Height (cm)	degree (deg)	Remark
1	44.9006	31.11	-15.77	15.34	40.00	-24.66	peak			
2	53.9763	32.51	-15.84	16.67	40.00	-23.33	peak			
3	130.8369	56.29	-20.53	35.76	40.00	-4.24	peak			
4	173.2051	48.56	-19.36	29.20	40.00	-10.80	peak			
5	466.4165	31.59	-8.90	22.69	47.00	-24.31	peak			
6	768.7481	30.88	-1.86	29.02	47.00	-17.98	peak			

Note: **Result=Reading+Factor** **Over Limit=Result-Limit**

Test item:	**Radiation Test**	**Polarization:**	**Horizontal**
Standard:	**(RE)EN 55014-1**	**Power Source:**	**DC 3.7V**
Distance:	**3m**	**Temp.(℃)/Hum.(%RH):**	**23.5(℃)/56%RH**
Test Mode:	**Normal work(Pulse)**		

No.	Freq. (MHz)	Reading (dBuV)	Factor (dB/m)	Result (dBuV/m)	Limit (dBuV/m)	Over Limit (dB)	Detector	Height (cm)	degree (deg)	Remark
1	52.5752	31.72	-15.76	15.96	40.00	-24.04	peak			
2	134.3234	54.48	-20.71	33.77	40.00	-6.23	peak			
3	170.1947	55.56	-19.51	36.05	40.00	-3.95	peak			
4	204.5961	41.49	-16.85	24.64	40.00	-15.36	peak			
5	334.2722	35.96	-11.99	23.97	47.00	-23.03	peak			
6	391.4082	33.98	-10.55	23.43	47.00	-23.57	peak			

Note: **Result=Reading+Factor** **Over Limit=Result-Limit**

Test item:	**Radiation Test**	**Polarization:**	**Vertical**
Standard:	**(RE)EN 55014-1**	**Power Source:**	**DC 3.7V**
Distance:	**3m**	**Temp.(℃)/Hum.(%RH):**	**23.5(℃)/56%RH**
Test Mode:	**Normal work(Pulse)**		

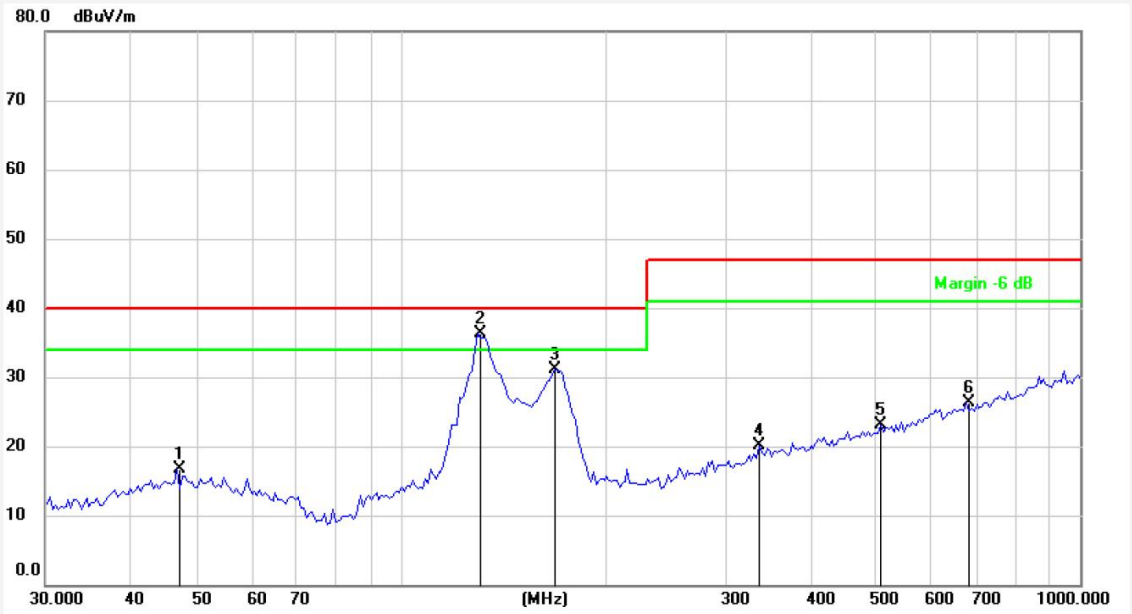

No.	Freq. (MHz)	Reading (dBuV)	Factor (dB/m)	Result (dBuV/m)	Limit (dBuV/m)	Over Limit (dB)	Detector	Height (cm)	degree (deg)	Remark
1	46.9125	32.37	-15.71	16.66	40.00	-23.34	peak			
2	129.6950	56.76	-20.46	36.30	40.00	-3.70	peak			
3	168.7093	50.76	-19.59	31.17	40.00	-8.83	peak			
4	337.2155	31.98	-11.83	20.15	47.00	-26.85	peak			
5	509.1501	30.83	-7.74	23.09	47.00	-23.91	peak			
6	679.9600	30.11	-3.76	26.35	47.00	-20.65	peak			

Note: **Result=Reading+Factor** **Over Limit=Result-Limit**

4. Harmonic Current Emission Test

4.1. Test Standard

Test Standard	EN IEC 61000-3-2

4.2. Test Setup

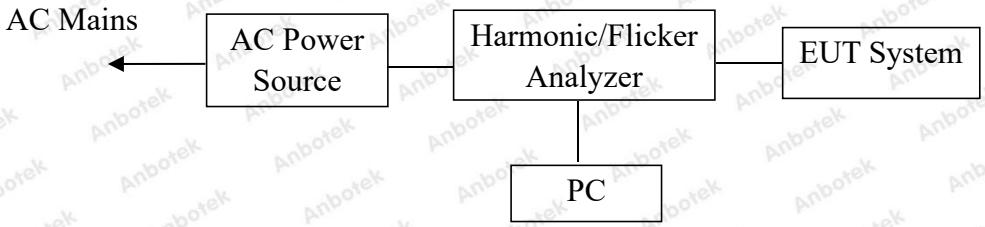

4.3. Operating Condition of EUT

4.3.1. Setup the EUT as shown on Section 4.2.

4.3.2. Turn on the power of all equipments.

4.3.3. After that, let the EUT work in test mode measure it.

4.4. Test Results

N/A

The active input power of the EUT is less than 75W. Therefore, according to EN IEC 61000-3-2, no limits are necessary.

5. Voltage Fluctuations & Flicker Test

5.1. Test Standard

Test Standard	EN 61000-3-3

5.2. Test Setup

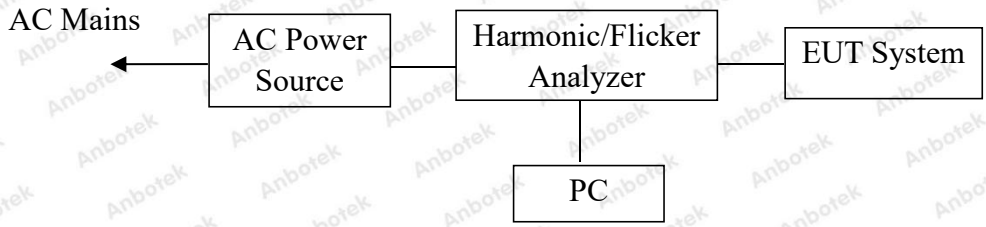

5.3. Operating Condition of EUT

5.3.1. Setup the EUT as shown on Section 5.2.

5.3.2. Turn on the power of all equipments.

5.3.3. After that, let the EUT work in test mode measure it.

5.4. Test Results

PASS

6. Electrostatic Discharge Immunity Test

6.1. Test Standard and Level

Test Standard:	EN 55014-2 (IEC 61000-4-2)
Performance Criterion:	B
Severity Level: 3 / Air Discharge: ±8kV, Level: 2 / Contact Discharge: ±4kV	

Test Level

Level	Test Voltage Contact Discharge (kV)	Test Voltage Air Discharge (kV)
1.	±2	±2
2.	±4	±4
3.	±6	±8
4.	±8	±15
X	Special	Special

6.2. Test Setup

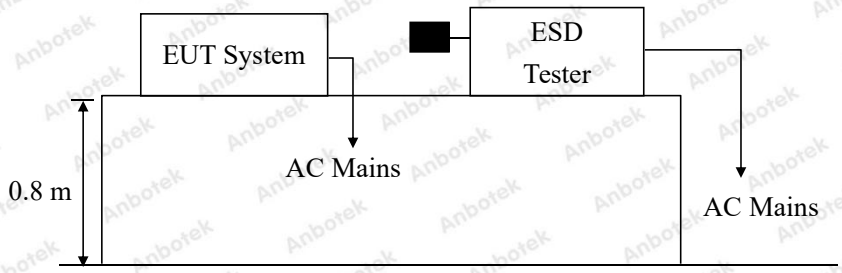

6.3. EUT Configuration on Measurement

The following equipments are installed on Electrostatic Discharge immunity Measurement to meet EN 55014-2 requirements and operating in a manner which tends to maximize its emission characteristics in a normal application.

6.4. Operating Condition of EUT

6.4.1. Setup the EUT as shown on Section 6.2.

6.4.2. Turn on the power of all equipments.

6.4.3. After that, let the EUT work in test mode measure it.

6.5. Test Procedure

6.5.1. Air Discharge:

This test is done on a non-conductive surface. The round discharge tip of the discharge electrode shall be approached as fast as possible to touch the EUT. After each discharge, the discharge electrode shall be removed from the EUT. The generator is then re-triggered for a new single discharge and repeated 10 times for each pre-selected test point. This procedure shall be repeated until all the air discharge completed

6.5.2. Contact Discharge:

All the procedure shall be same as Section 6.5.1. except that the tip of the discharge electrode shall touch the EUT before the discharge switch is operated.

6.5.3. Indirect discharge for horizontal coupling plane

At least 20 single discharges shall be applied to the horizontal coupling plane, at points on each side of the EUT. The discharge electrode positions vertically at a distance of 0.1m from the EUT and with the discharge electrode touching the coupling plane.

6.5.4. Indirect discharge for vertical coupling plane

At least 20 single discharge shall be applied to the center of one vertical edge of the coupling plane. The coupling plane, of dimensions 0.5m × 0.5m, is placed parallel to, and positioned at a distance of 0.1m from the EUT. Discharges shall be applied to the coupling plane, with this plane in sufficient different positions that the four faces of the EUT are completely illuminated.

6.6. Test Results

PASS

Please refer to the following page.

Address: 1/F., Building D, Sogood Science and Technology Park, Sanwei Community, Hangcheng Street, Bao'an District, Shenzhen, Guangdong, China.
Tel:(86) 755-26066440 Fax: (86) 755-26014772 Email: service@anbotek.com
Hotline 400-003-0500
www.anbotek.com

Electrostatic Discharge Test Results

Air discharge :	±8.0kV	Temperature :	23.2℃
Contact discharge :	±4.0kV	Humidity :	50%
Power Supply :	DC 5V Via adapter / DC 3.7V	Expert conclusion :	A
Number of discharge:	10	Test Result:	☒ Pass ☐ Fail

Location		**Kind** A-Air Discharge C-Contact Discharge	**Result**
Slot	4 points	A	☑ A ☐ B ☐ C ☐ D
Screen	4 points	A	☑ A ☐ B ☐ C ☐ D
Button	4 points	A	☑ A ☐ B ☐ C ☐ D
Type-C Port	4 points	A	☑ A ☐ B ☐ C ☐ D
USB Port	4 points	A	☑ A ☐ B ☐ C ☐ D
HCP	4 points	C	☑ A ☐ B ☐ C ☐ D
VCP of the front	1 points	C	☑ A ☐ B ☐ C ☐ D
VCP of the rear	1 points	C	☑ A ☐ B ☐ C ☐ D
VCP of the left	1 points	C	☑ A ☐ B ☐ C ☐ D
VCP of the right	1 points	C	☑ A ☐ B ☐ C ☐ D

Remark: Discharge should be considered on Contact and Air and Horizontal Coupling Plane (HCP) and Vertical Coupling Plane (VCP).

Address: 1/F., Building D, Sogood Science and Technology Park, Sanwei Community, Hangcheng Street, Bao'an District, Shenzhen, Guangdong, China.
Tel:(86) 755-26066440 Fax: (86) 755-26014772 Email: service@anbotek.com
Hotline 400-003-0500
www.anbotek.com

7. RF Field Strength Susceptibility Test

7.1. Test Standard and Level

Test Standard:	EN 55014-2 (IEC 61000-4-3)
Required Performance:	A
Frequency Range:	80MHz to 1000MHz
Field Strength:	3 V/m
Modulation:	1kHz Sine Wave, 80%, AM Modulation
Frequency Step:	1 % of preceding frequency value
Polarity of Antenna:	Horizontal and Vertical
Test Distance:	3 m
Antenna Height:	1.5 m
Dwell Time:	at least 0.5s

Test Level

Level	Field Strength V/m
1.	1
2.	3
3.	10
X.	Special

7.2. Test Setup

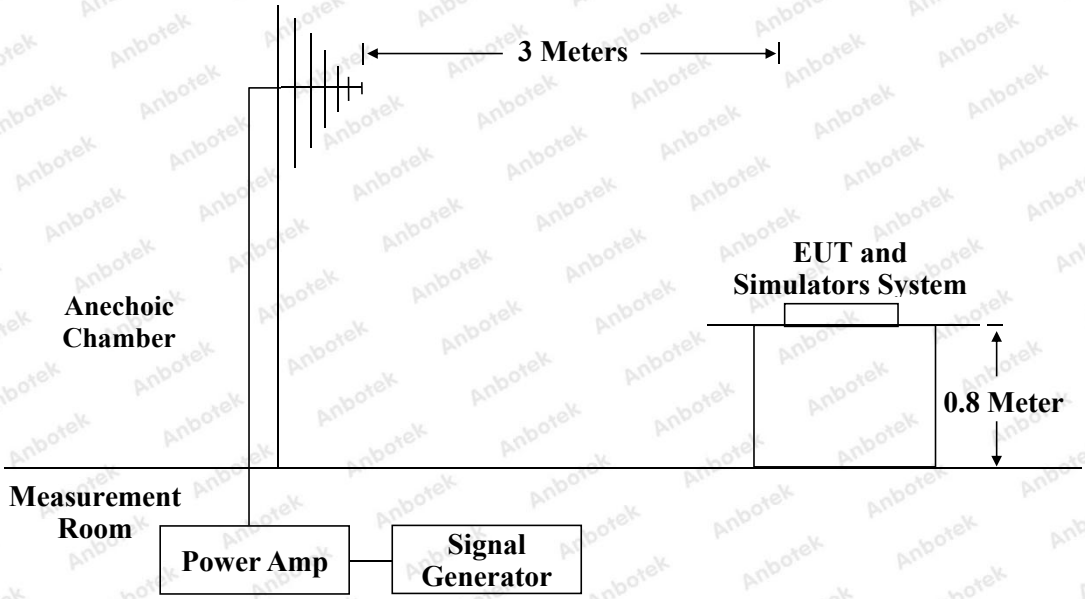

7.3. EUT Configuration on Measurement

The following equipments are installed on RF Field Strength susceptibility Measurement to meet EN 55014-2 requirements and operating in a manner which tends to maximize its emission characteristics in a normal application.

7.4. Operating Condition of EUT

7.4.1. Setup the EUT as shown on Section 7.2.

7.4.2. Turn on the power of all equipments.

7.4.3. After that, let the EUT work in test mode measure it.

7.5. Test Procedure

The EUT and support equipment, which are placed on a table that is 0.8 meter above ground and the testing was performed in a fully-anechoic chamber. The testing distance from antenna to the EUT was 3 meters.

1) The field strength level was 3V/m.

2) The frequency range is swept from 80 MHz to 1000 MHz with the signal 80% amplitude modulated with a 1kHz sine wave.

3) The dwell time at each frequency shall be not less than the time necessary for the EUT to be able to respond, but shall in no case be less than 0.5s.

4) The test was performed with the EUT exposed to both vertically and horizontally polarized fields on each of the four sides.

7.6. Measuring Results

PASS

Please refer to the following page.

Address: 1/F., Building D, Sogood Science and Technology Park, Sanwei Community, Hangcheng Street, Bao'an District, Shenzhen, Guangdong, China.
Tel:(86) 755-26066440 Fax: (86) 755-26014772 Email: service@anbotek.com
Hotline 400-003-0500
www.anbotek.com

RF Field Strength Susceptibility Test Results

Field Strength :	3V/m	Temperature :	23.5℃
Expert conclusion:	A	Humidity :	56%
Power Supply :	DC 5V Via adapter, DC 3.7V	Test Result :	☒ Pass ☐ Fail
Dwell Time:	1s		

Frequency Range (MHz)	Antenna Polarity	R.F. Field Strength	Azimuth	Result
80~1000	H / V	3 V/m (rms)	Front	☑ A ☐ B ☐ C ☐ D
			Rear	
			Left	
			Right	

Address: 1/F., Building D, Sogood Science and Technology Park, Sanwei Community, Hangcheng Street, Bao'an District, Shenzhen, Guangdong, China.
Tel:(86) 755-26066440 Fax: (86) 755-26014772 Email: service@anbotek.com
Hotline 400-003-0500
www.anbotek.com

8. Electrical Fast Transient/Burst Immunity Test

8.1. Test Standard and Level

Test Standard:	EN 55014-2 (IEC 61000-4-4)
Performance criterion:	B
Severity Level 2: 1.00kV	

Test Level

Open Circuit Output Test Voltage ± 10%		
Level	On Power Supply Lines	On I/O (Input/Output) Signal data and control lines
1.	0.50 kV	0.25 kV
2.	1.00 kV	0.50 kV
3.	2.00 kV	1.00 kV
4.	4.00 kV	2.00 kV
X.	Special	Special

8.2. Test Setup

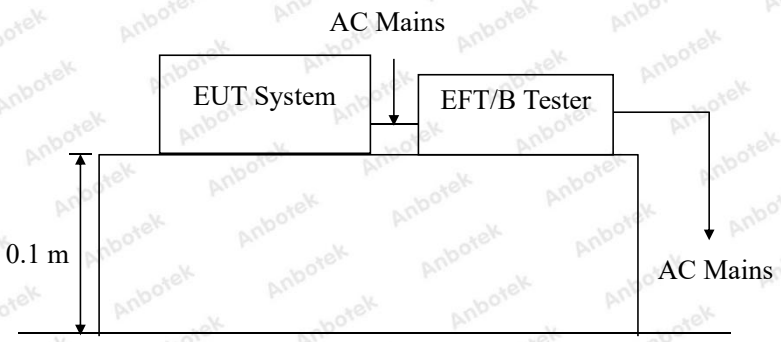

8.3. EUT Configuration on Measurement

The following equipments are installed on Electrical Fast Transient/Burst Immunity Measurement to meet EN 55014-2 requirements and operating in a manner which tends to maximize its emission characteristics in a normal application.

8.4. Operating Condition of EUT

8.4.1. Setup the EUT as shown in Section 8.2.

8.4.2. Turn on the power of all equipments.

8.4.3. Let the EUT work in test mode and measure it.

8.5. Test Procedure

The EUT is put on the table which is 0.1 meter high above the ground. This reference ground plane shall project beyond the EUT by at least 0.1m on all sides and the minimum distance between EUT and all other conductive structure, except the ground plane beneath the EUT, shall be more than 0.5m.

8.5.1. For input and output AC power ports:

The EUT is connected to the power mains by using a coupling device which couples the EFT interference signal to AC power lines. Both polarities of the test voltage should be applied during compliance test and the duration of the test is 2 mins.

8.5.2. For signal lines and control lines ports:

Select tests based on product characteristics.

8.5.3. For DC output line ports:

Select tests based on product characteristics.

8.6. Test Results

PASS

Please refer to the following page.

Address: 1/F., Building D, Sogood Science and Technology Park, Sanwei Community, Hangcheng Street, Bao'an District, Shenzhen, Guangdong, China.
Tel:(86) 755-26066440 Fax: (86) 755-26014772 Email: service@anbotek.com
Hotline 400-003-0500
www.anbotek.com

Electrical Fast Transient/Burst Test Results

Ambient Condition : 23.2℃ / 50% RH		Expert conclusion : A	
Power Supply .: DC 5V Via adapter		Test Result : ☒ Pass ☐ Fail	
Inject Line : AC Mains	Inject Method: Direct	Inject Time(s): 120	
Line	Polarity	Test Voltage (kV)	Result
AC Line	±	1.00kV	☑ A ☐ B ☐ C ☐ D

9. Surge Immunity Test

9.1. Test Standard and Level

Test Standard:	EN 55014-2 (IEC 61000-4-5)
Performance criterion:	B
Severity Level 2, Line to Line: 1.0kV	

Test Level

Severity Level	Open-Circuit Test Voltage (kV)
1.	0.5
2.	1.0
3.	2.0
4.	4.0
X.	Special

9.2. Test Setup

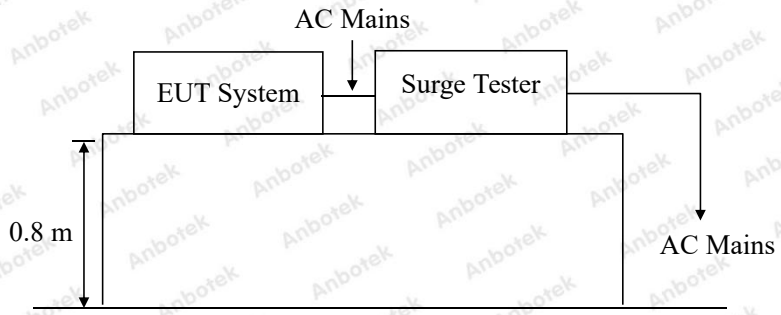

9.3. EUT Configuration on Measurement

The following equipments are installed on Surge immunity Measurement to meet EN 55014-2 requirements and operating in a manner which tends to maximize its emission characteristics in a normal application.

9.4. Operating Condition of EUT

9.4.1. Setup the EUT as shown in Section 9.2.

9.4.2. Turn on the power of all equipments.

9.4.3. Let the EUT work in test mode and measure it.

9.5. Test Procedure

9.5.1. Set up the EUT and test generator as shown on Section 9.2.

9.5.2. For line to line coupling mode, provide a 1.0kV 1.2/50us voltage surge (at open-circuit condition) and 8/20us current surge to EUT selected points.

9.5.3. At least 5 positive and 5 negative (polarity) tests with a maximum 1/min repetition rate are conducted during test.

9.5.4. Different phase angles are done individually.

9.5.5. Record the EUT operating situation during compliance test and decide the EUT immunity criterion for above each test.

9.6. Test Results

PASS

Please refer to the following page.

Surge Immunity Test Results

Humidity :	50%	Temperature :	23.2℃
Power Supply :	DC 5V Via adapter	Expert conclusion:	A
Test Result :	☒ Pass ☐ Fail		

Location	Polarity	Phase Angle	Number of Pulse	Pulse Voltage (kV)	Result
L-N	+	☐ 0° ☒ 90° ☐ 180° ☐ 270°	5	1.0kV	☑ A ☐ B ☐ C ☐ D
L-N	-	☐ 0° ☐ 90° ☐ 180° ☒ 270°	5	1.0kV	☑ A ☐ B ☐ C ☐ D

10. Injected Currents Susceptibility Test

10.1. Test Standard and Level

Test Standard	EN 55014-2 (IEC 61000-4-6)
Performance criterion	A
Severity Level 2: 3V (rms), (0.15MHz ~230MHz)	

Test Level

Level	Field Strength V
1.	1
2.	3
3.	10
X.	Special

10.2. Test Setup

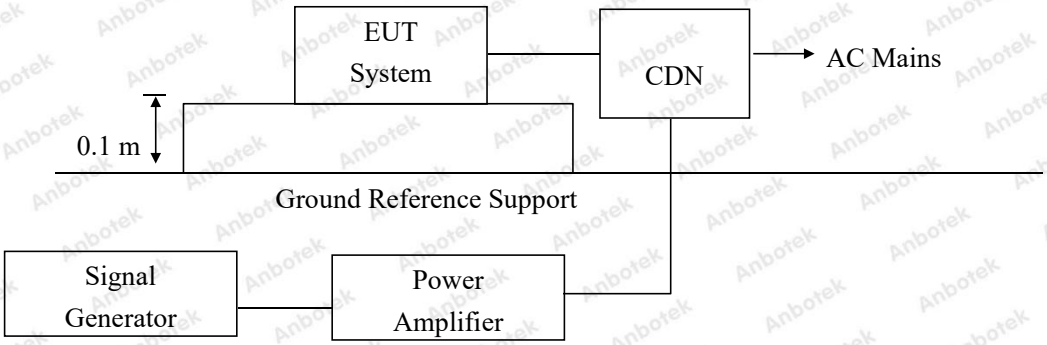

10.3. EUT Configuration

The following equipments are installed on currents susceptibility Measurement to meet EN 55014-2 requirements and operating in a manner which tends to maximize its emission characteristics in a normal application.

10.4. Operating Condition of EUT

10.4.1. Setup the EUT as shown in Section 10.2.

10.4.2. Turn on the power of all equipments.

10.4.3. Let the EUT work in test mode and measure it.

10.5. Test Procedure

1) Set up the EUT, CDN and test generators as shown on Section 10.2.
2) Let the EUT work in test mode and measure it.
3) The EUT are placed on an insulating support 0.1m high above a ground reference plane. CDN (coupling and decoupling device) is placed on the ground plane about 0.3m from EUT. Cables between CDN and EUT are as short as possible, and their height above the ground reference plane shall be between 30 and 50 mm (where possible).
4) The disturbance signal described below is injected to EUT through CDN.
5) The EUT operates within its operational mode(s) under intended climatic conditions after power on.
6) The frequency range is swept from 150kHz to 230MHz using 3V signal level, and with the disturbance signal 80% amplitude modulated with a 1kHz sine wave.
7) The rate of sweep shall not exceed 1.5*10-3decades/s. Where the frequency is swept incrementally, the step size shall not exceed 1% of the start and thereafter 1% of the preceding frequency value.
8) Recording the EUT operating situation during compliance testing and decide the EUT immunity criterion.

10.5.1. For signal lines and control lines ports:

Select tests based on product characteristics.

10.5.2. For DC output line ports:

Select tests based on product characteristics.

10.6. Test Results

PASS

Please refer to the following page.

Address: 1/F., Building D, Sogood Science and Technology Park, Sanwei Community, Hangcheng Street, Bao'an District, Shenzhen, Guangdong, China.
Tel:(86) 755-26066440 Fax: (86) 755-26014772 Email: service@anbotek.com
Hotline 400-003-0500
www.anbotek.com

Injected Currents Susceptibility Test Results

Humidity : 50%		Temperature : 23.2℃	
Power Supply : DC 5V Via adapter		Expert conclusion: A	
Test Result : ☒ Pass ☐ Fail			
Frequency Range (MHz)	Injected Position	Strength (Unmodulated)	Result
0.15 ~ 230	AC Mains	3V	☑ A ☐ B ☐ C ☐ D

Remark : 1. Modulation Signal:1KHz 80% AM

Address: 1/F., Building D, Sogood Science and Technology Park, Sanwei Community, Hangcheng Street, Bao'an District, Shenzhen, Guangdong, China.
Tel:(86) 755-26066440 Fax: (86) 755-26014772 Email: service@anbotek.com
Hotline 400-003-0500
www.anbotek.com

11. Voltage Dips And Interruptions Test

11.1. Test Standard and Level

Test Standard:	EN 55014-2 (IEC 61000-4-11)
Performance Criterion:	C

Test Level

Test Level %UT	Voltage dip and short interruptions %UT	Duration (in period)
0	100	0.5 1 5 10 25 50 *
40	60	
70	30	
/	/	

11.2. Test Setup

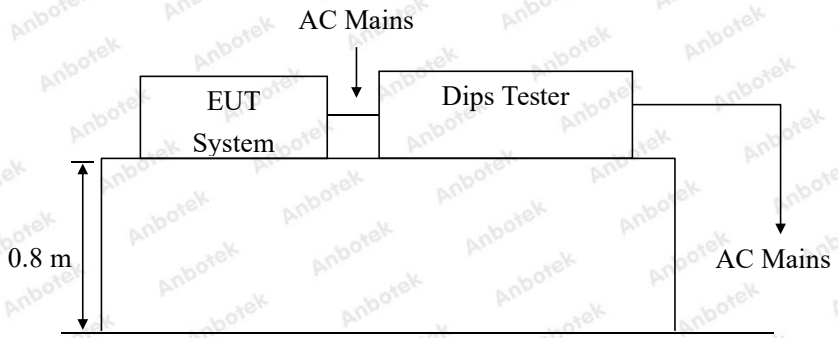

11.3. EUT Configuration on Measurement

The following equipments are installed on Voltage dips and interruptions Measurement to meet EN 55014-2 requirements and operating in a manner which tends to maximize its emission characteristics in a normal application.

11.4. Operating Condition of EUT

11.4.1. Setup the EUT as shown in Section 11.2.

11.4.2. Turn on the power of all equipments.

11.4.3. Let the EUT work in test mode and measure it.

11.5. Test Procedure

1) Set up the EUT and test generator as shown on Section 11.2.
2) The interruptions is introduced at selected phase angles with specified duration.
3) Record any degradation of performance.

11.6. Test Results

PASS

Please refer to the following page.

Address: 1/F., Building D, Sogood Science and Technology Park, Sanwei Community, Hangcheng Street, Bao'an District, Shenzhen, Guangdong, China.
Tel:(86) 755-26066440 Fax: (86) 755-26014772 Email: service@anbotek.com
Hotline 400-003-0500
www.anbotek.com

Voltage Dips and Interruptions Test Results

Temperature : 23.2℃	Humidity : 50％
Power Supply : DC 5V Via adapter	Expert conclusion : C
Test Result : ☒ Pass ☐ Fail	

Test Level % UT	Voltage Dips & Short Interruptions % UT	Duration (in periods)	Result
0	100	0.5P	☐ A ☐ B ☑ C ☐ D
40	60	10P	☐ A ☐ B ☑ C ☐ D
70	30	25P	☐ A ☐ B ☑ C ☐ D

Test Level % UT	Voltage Dips & Short Interruptions % UT	Duration (in periods)	Result

APPENDIX I -- TEST SETUP PHOTOGRAPH

Photo of Power Line Conducted Emission Test

Photo of Radiated Emission Test

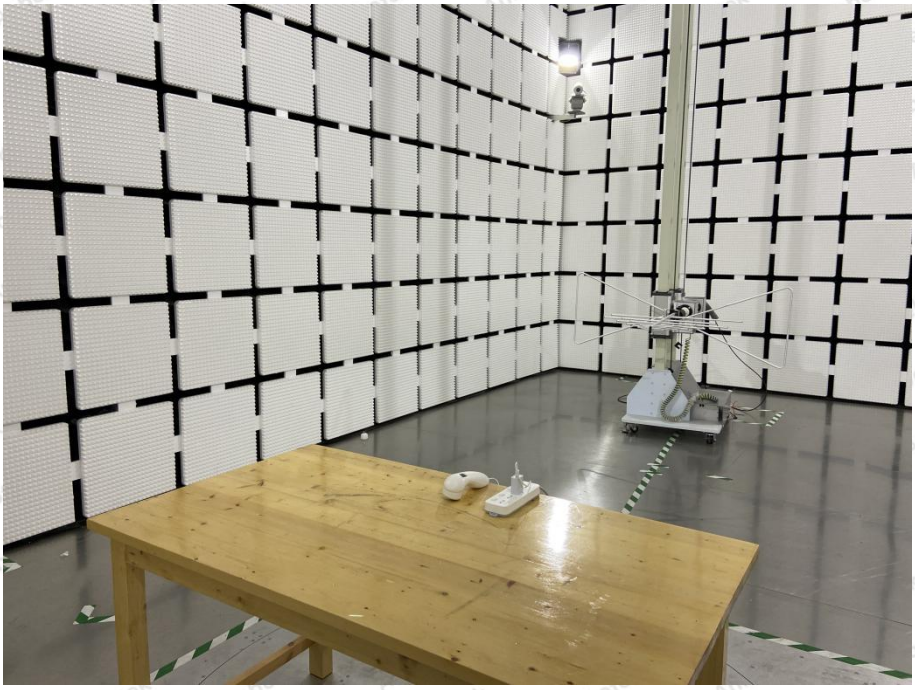

Photo of Electrostatic Discharge Immunity Test

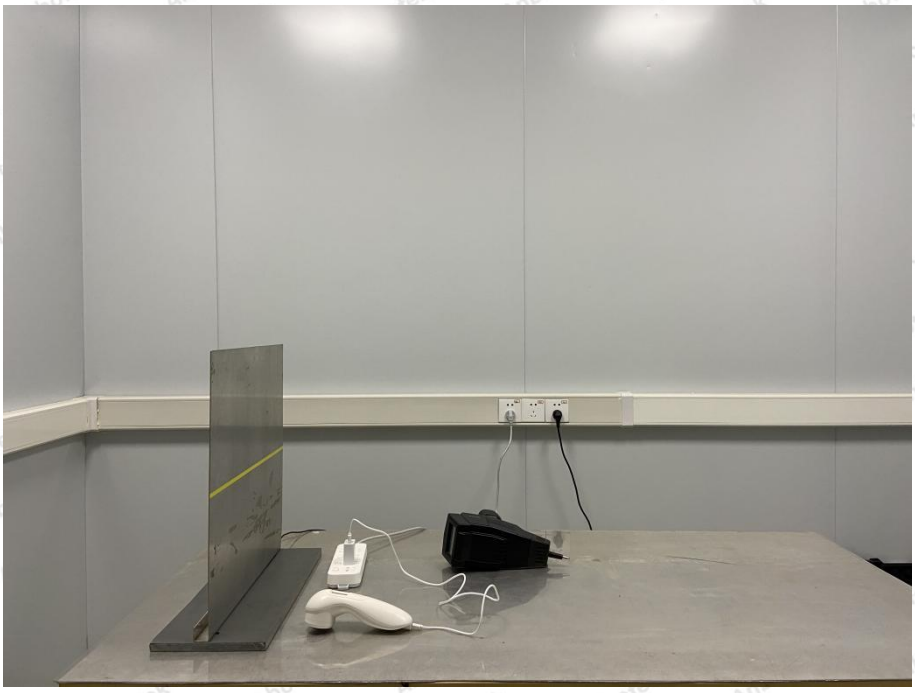

Photo of RF Field Strength susceptibility Test

Photo of Electrical Fast Transient/Burst Immunity Test

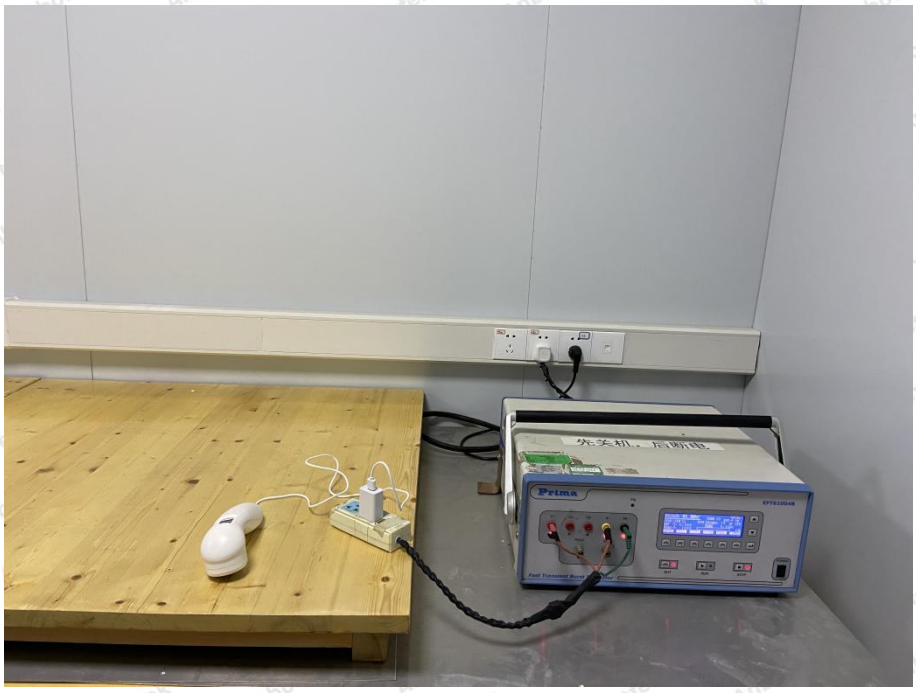

Photo of Surge Immunity Test

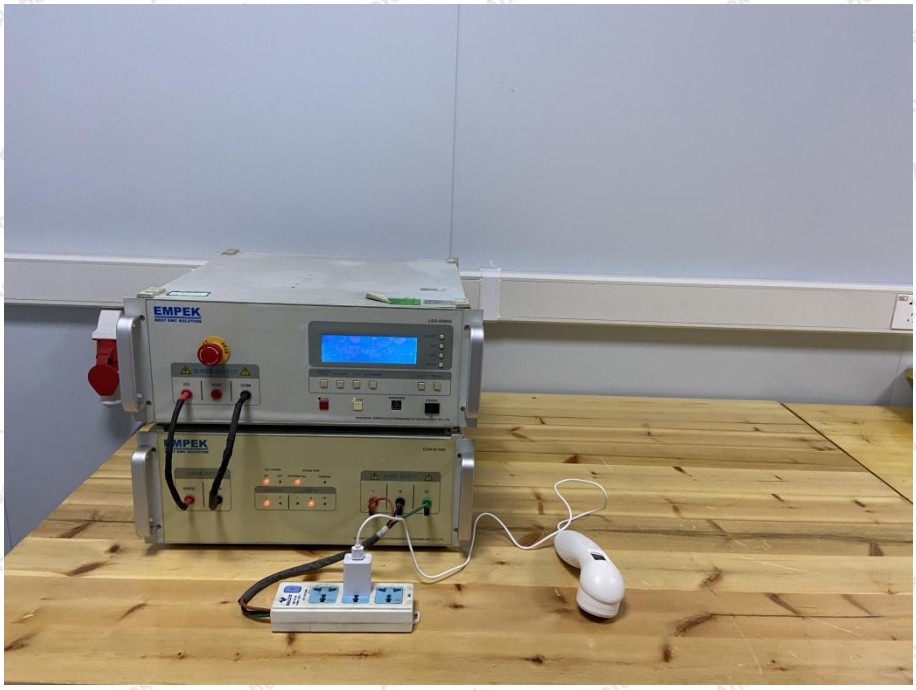

Photo of Injected currents susceptibility Test

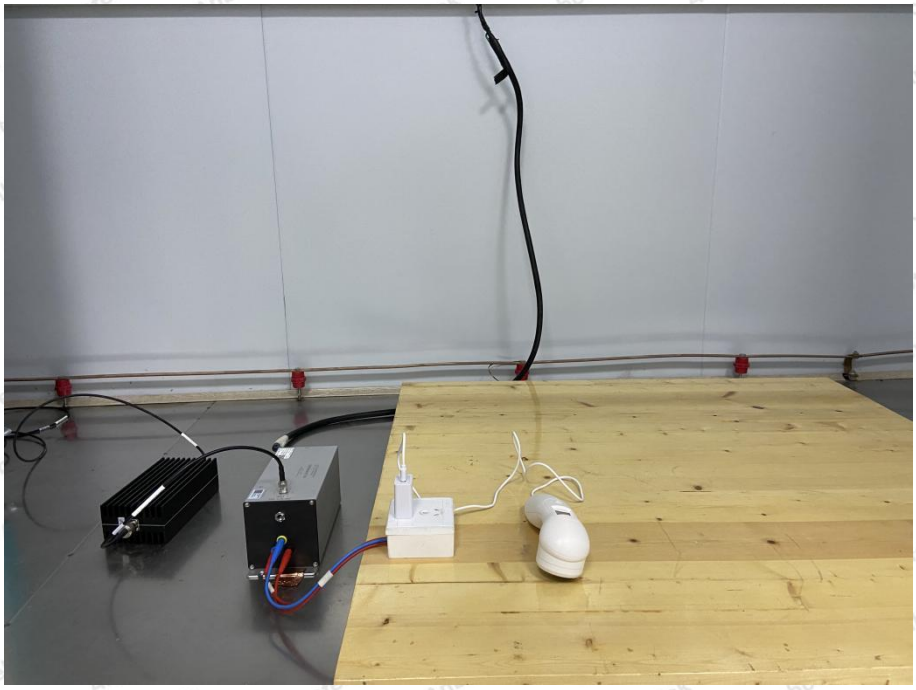

Photo of Voltage Dips and Interruptions Test

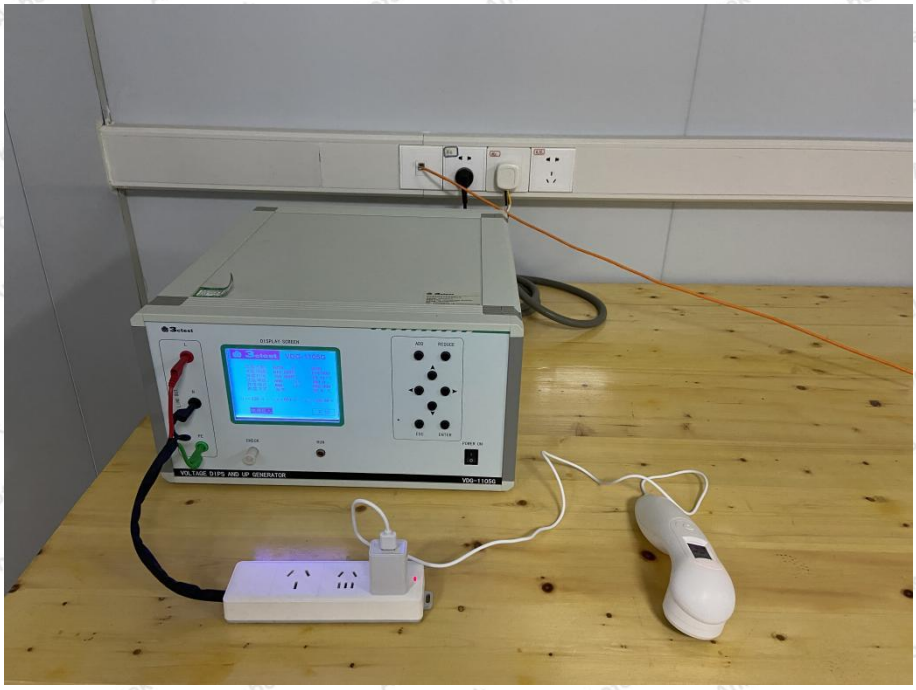

APPENDIX II -- EXTERNAL PHOTOGRAPH

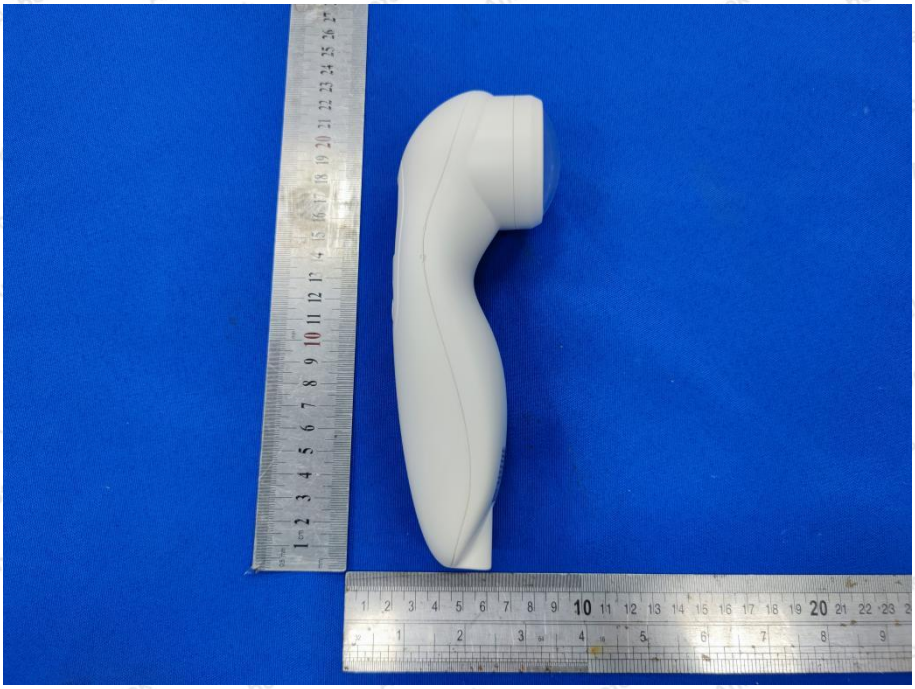

POWER ADAPTER
Model:CT-11
GB17625.1-2020
Gb49431.2020 GB9251-2020
S/N:16022012676
Input:100-240VAC,50/60Hz,0.5A
Output: 5V= 2A

APPENDIX III -- INTERNAL PHOTOGRAPH

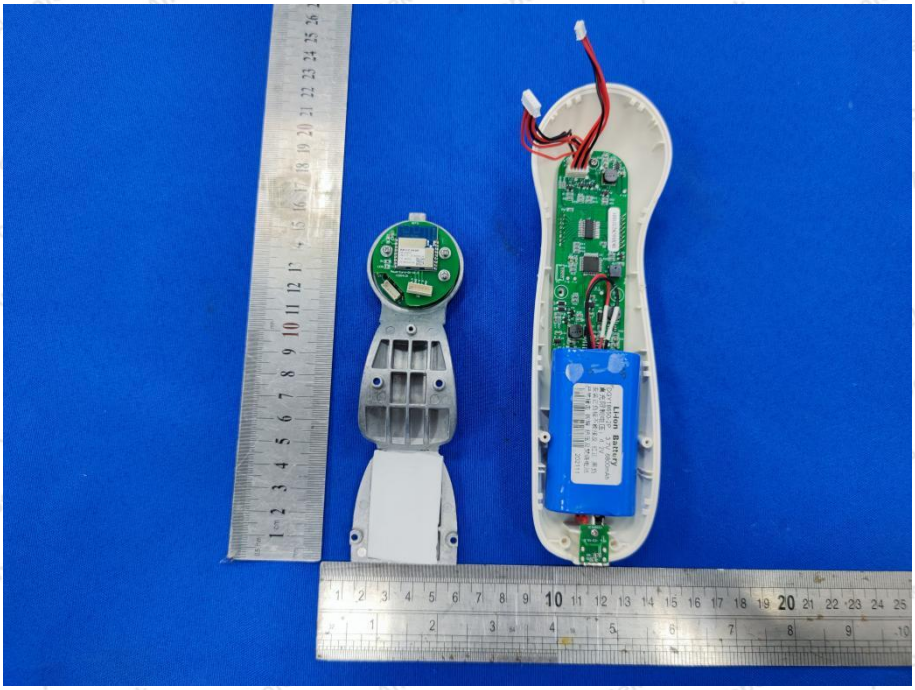

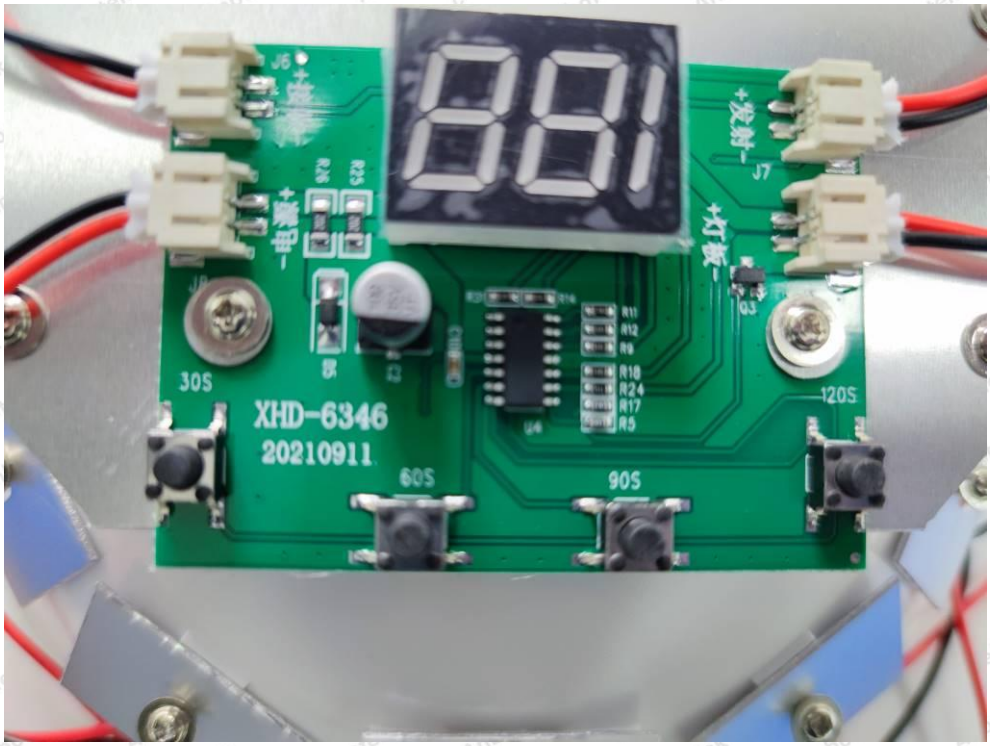
XHD-6346
20210911
30S
60S
90S
120S

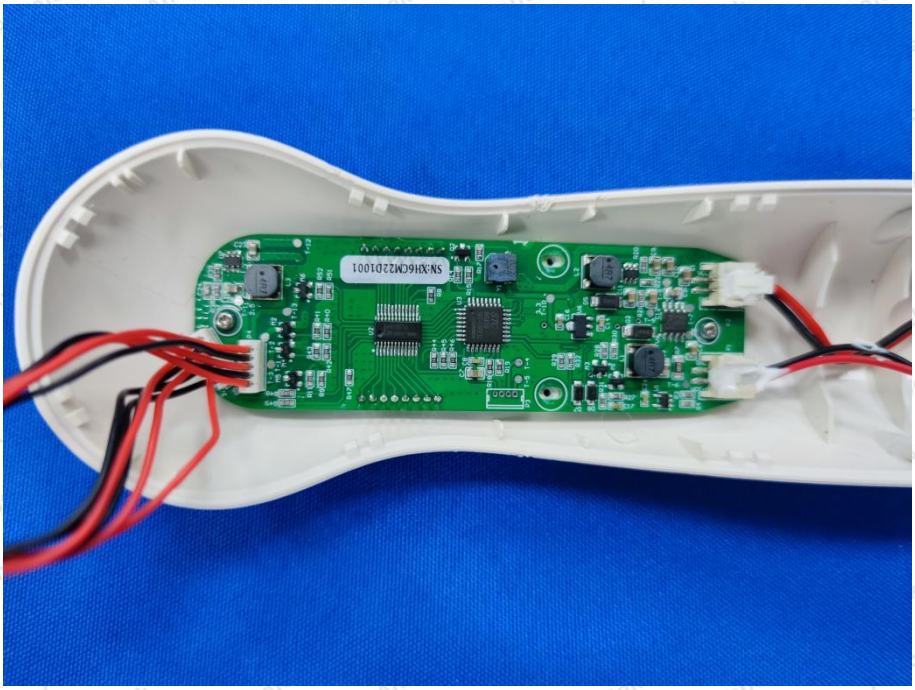

CE Label

1. The CE conformity marking must consist of the initials 'CE' taking the following form:

   If the CE marking is reduced or enlarged, the proportions given in the above graduated drawing must be respected.

2. The CE marking must have a height of at least 5 mm except where this is not possible on account of the nature of the apparatus.

3. The CE marking must be affixed to the product or to its data plate. Additionally it must be affixed to the packaging, if any, and to the accompanying documents.

4. The CE marking must be affixed visibly, legibly and indelibly.

   It must have the same height as the initials 'CE'.

---------- End of Report ----------

Address: 1/F., Building D, Sogood Science and Technology Park, Sanwei Community, Hangcheng Street, Bao'an District, Shenzhen, Guangdong, China.
Tel:(86) 755-26066440 Fax: (86) 755-26014772 Email: service@anbotek.com
Hotline 400-003-0500
www.anbotek.com